6322 W. Slauson Ave. Culver City, CA 90230

Studio Phone: (310) 839-5215

METAL LITES & LOUVERS

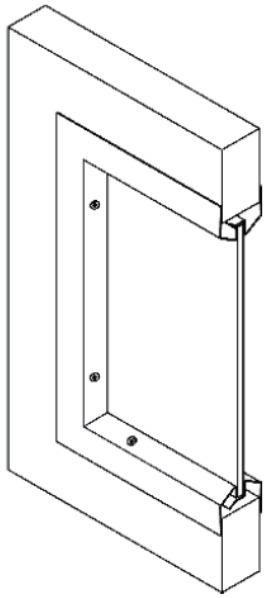

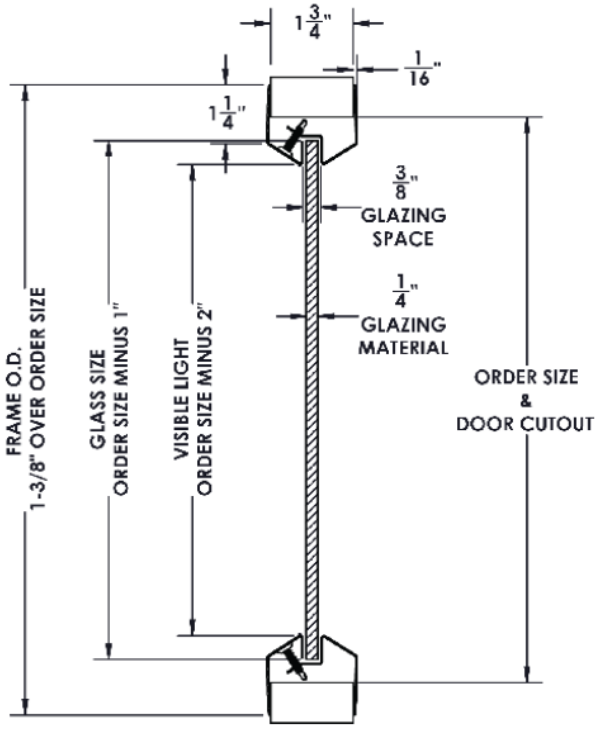

SIZES

6X27
7X32
8X32
12X12
18X18
18X24
18X32
18X56
18X66
24X24
24X30
24X32
24X36
24X56
24X66

OPTIONS

GRAY PRIMER OR BRONZE ENAMEL FRAME

CLEAR TEMP. GLASS OR SAFE-WIRE GLASS

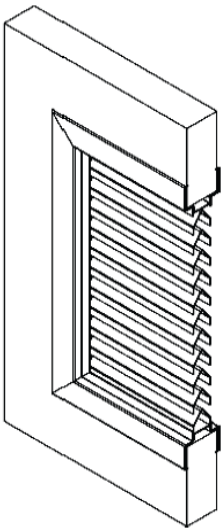

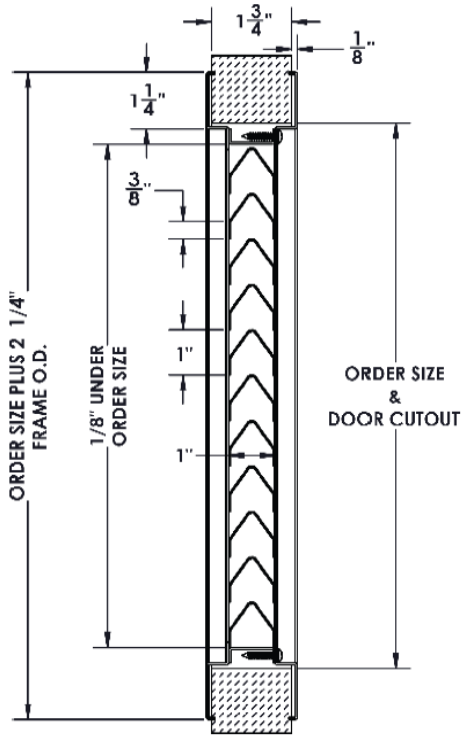

SIZES

12X12
16X10
18X12
18X56
18X66
24X12
24X18
24X24
24X56
24X66

OPTIONS

GRAY PRIMER OR BRONZE